2013
CA MECHANICAL CODE
802.5.4

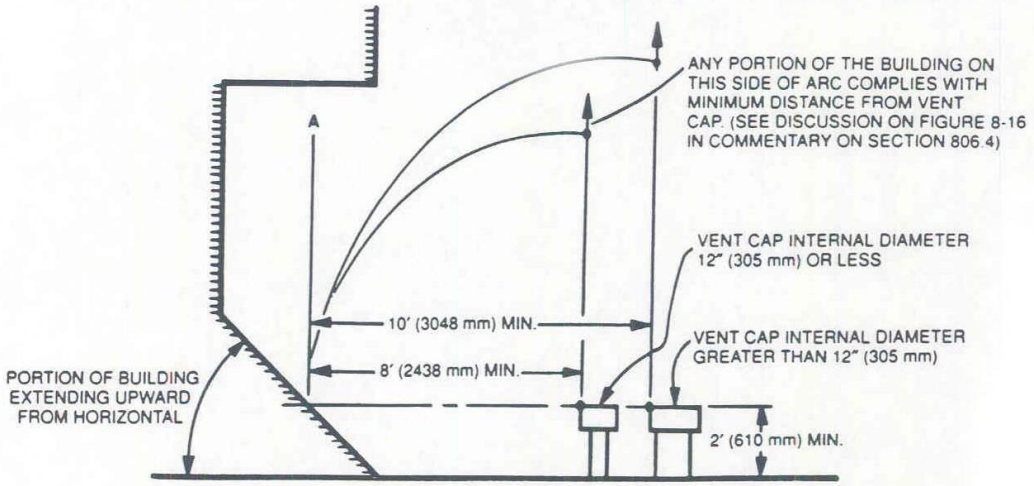

TERMINATION OF TYPE B OR BW VENTS THROUGH SLOPING OR FLAT ROOFS

FIGURE 8-1

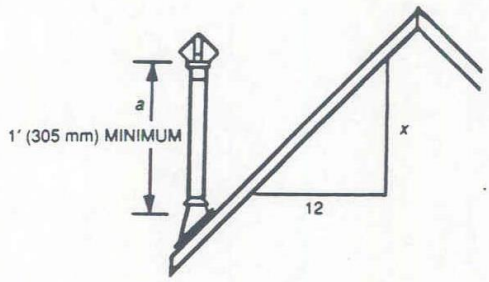

ROOF SLOPE = x UNITS VERTICAL IN 12 UNITS HORIZONTAL

EXAMPLE: IF ROOF SLOPE = $^{18}/_{12}$
FROM TABLE 8-A, THEN MEASUREMENT
"a" SHOULD BE A MINIMUM OF 7' (2134 mm)

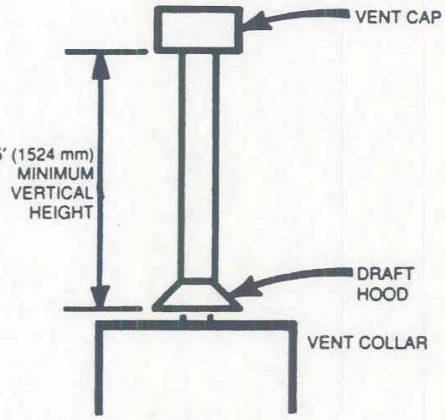

MINIMUM VENT HEIGHT

LISTED GAS VENT CAPS UP TO 12" (305 mm) INTERNAL DIAMETER HAVE BEEN FOUND TO BE SATISFACTORY FOR INSTALLATION ON LISTED GAS VENTS WITH WHICH THEY ARE COMPATIBLE, TERMINATING A SUFFICIENT DISTANCE FROM THE ROOF SO THAT NO DISCHARGE OPENING IS LESS THAN 1' (305 mm) ABOVE THE ROOF SURFACE, AND THE LOWEST DISCHARGE OPENING WILL BE NO CLOSER THAN THE MINIMUM HEIGHT SPECIFIED IN TABLE 8-C. THESE MINIMUM HEIGHTS MAY BE USED, PROVIDED THAT THE VENT IS NOT LESS THAN 8' (2438 mm) FROM ANY PORTION OF A BUILDING WHICH EXTENDS VERTICALLY UPWARD. VENT CAPS OVER 12" (305 mm) IN INTERNAL DIAMETER ARE TO BE INSTALLED AT LEAST 10 FEET (3048 mm) FROM ANY PORTION OF A BUILDING EXTENDING VERTICALLY UPWARD. IF CLOSER THAN 10 FEET (3048 mm), THE TERMINATION MUST BE EXTENDED AT 2 FEET (610 mm) HIGHER THAN ANY PORTION WITHIN 10 FEET.

TERMINATION OF TYPE B OR BW VENTS THROUGH SLOPING ROOFS