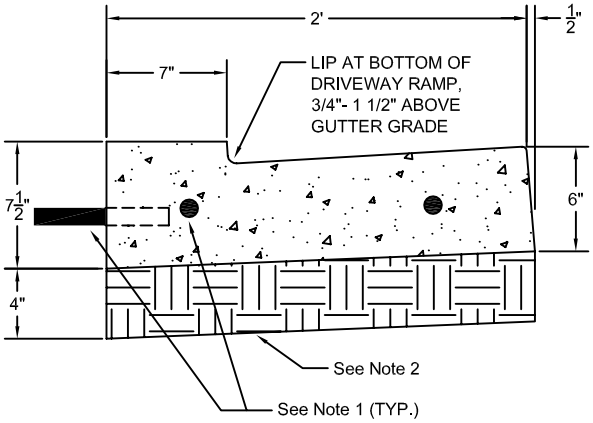

SECTION A-A

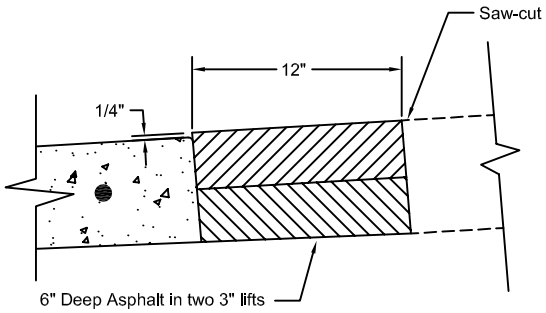

ASPHALT REPAIR AT GUTTER (TYP)

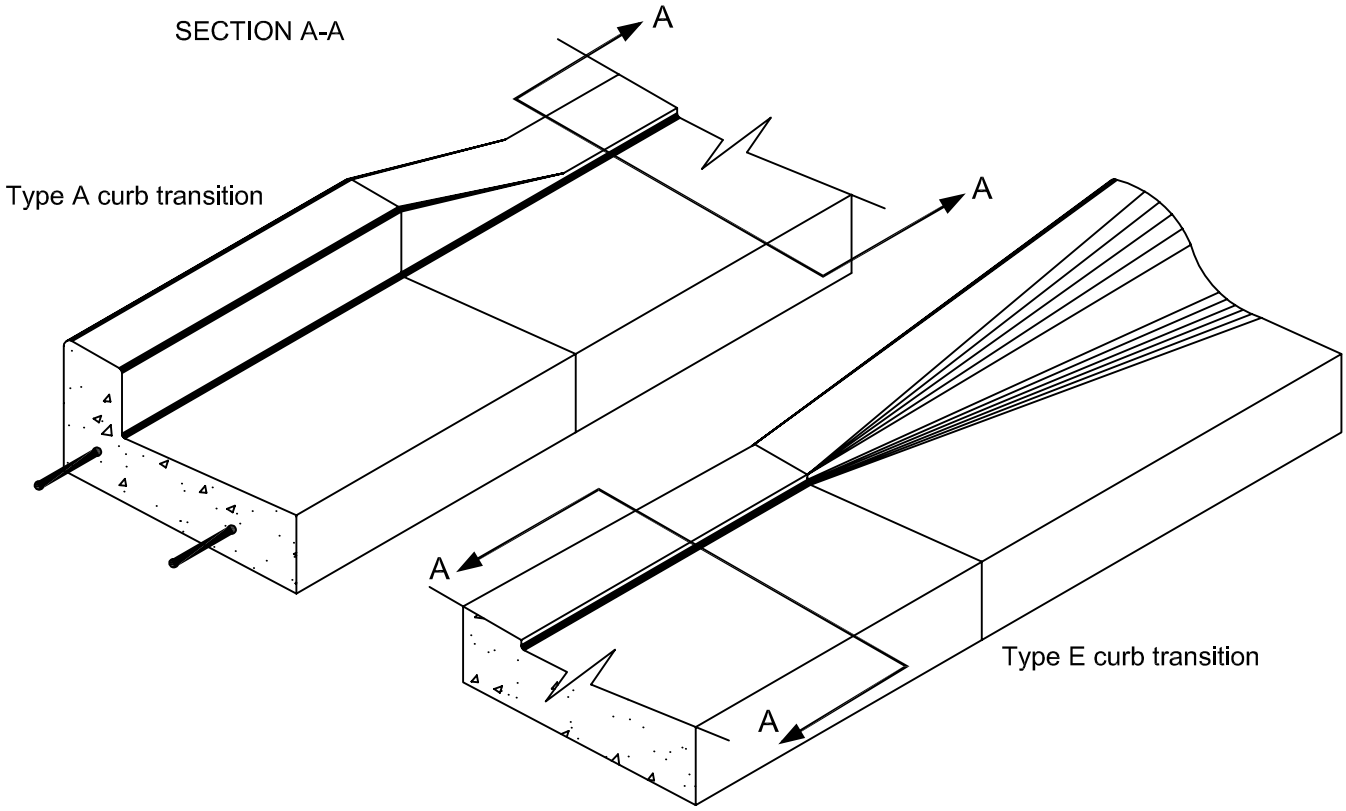

GENERAL NOTES

1. #4 REBAR DOWELS, 6" MINIMUM DEPTH INTO EXISTING SIDEWALK, CURB & GUTTER. DO NOT DOWEL PRIVATE IMPROVEMENTS INTO PUBLIC IMPROVEMENTS.
2. 4" MINIMUM CLASS 2 A.B. COMPACTED TO 90%
3. 1/2" DEEP CONTRACTION JOINTS AT 20', 1/4" DEEP CONTRACTION JOINTS AT 10'
4. ALL CONCRETE SHALL BE 6 SACK 3/4" WITH ONE POUND OF LAMP BLACK PER CUBIC YARD FINISH TO BE UNIFORM FINE BROOMED TEXTURE
5. DRIVEWAYS USING MATERIAL OTHER THEN ASPHALT OR NON TEXTURED CONCRETE MAY REQUIRE AN ADMINISTRATIVE PERMIT. CHECK WITH ENGINEERING.
6. ASPHALT TO BE HMA 1/2"FINE

CITY OF BELMONT

DEPARTMENT OF PUBLIC WORKS

CONCRETE CURB & GUTTER AT DRIVEWAY APPROACH

DWG No. _____

APPROVED

JAN 2013 NOT TO SCALE